GEBERIT

INSTALLATION MANUAL

MONTAGEANLEITUNG
INSTRUCTIONS DE MONTAGE
ISTRUZIONI PER IL MONTAGGIO

KNOW
HOW
INSTALLED

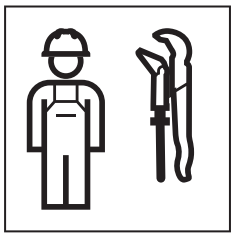

969.725.00.0(01)

cm

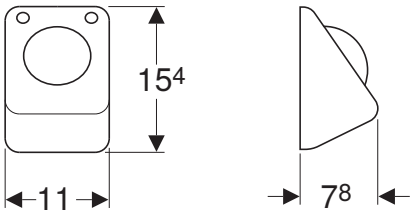

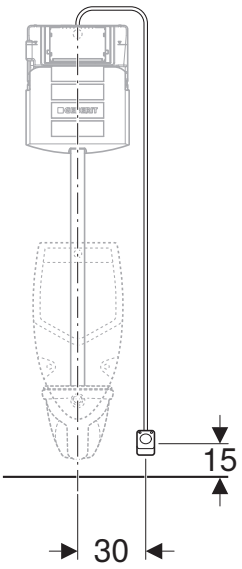

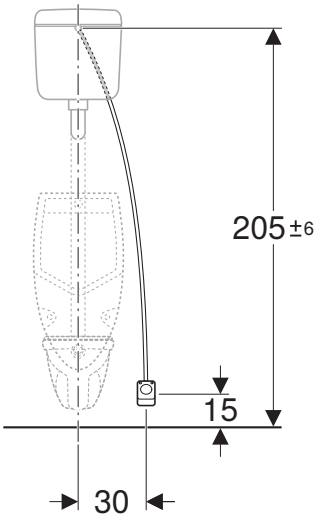

1

1

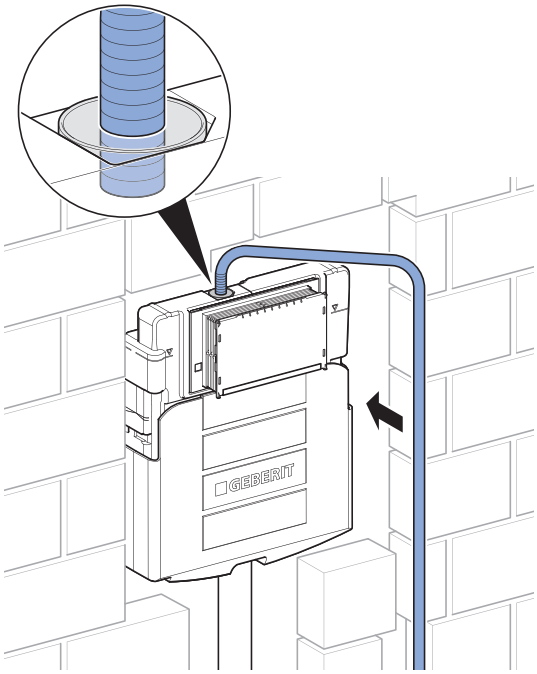

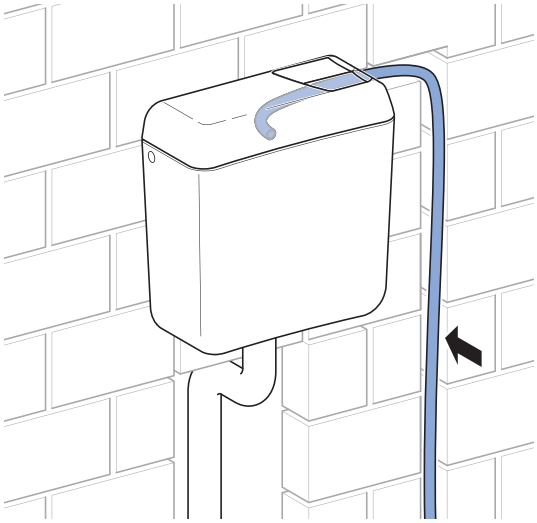

9007206486575115 © 06-2023
969.725.00.0(01)

2

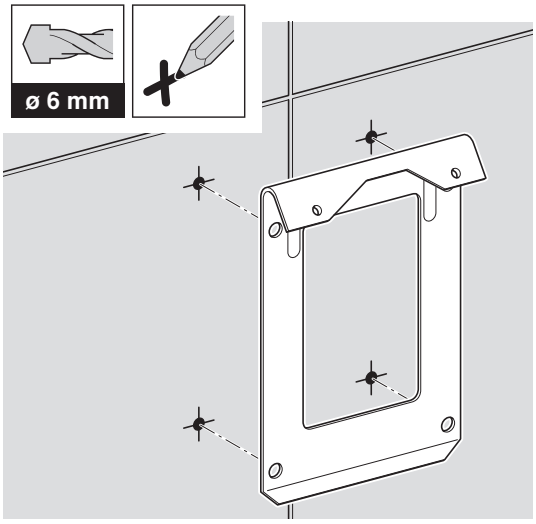

3

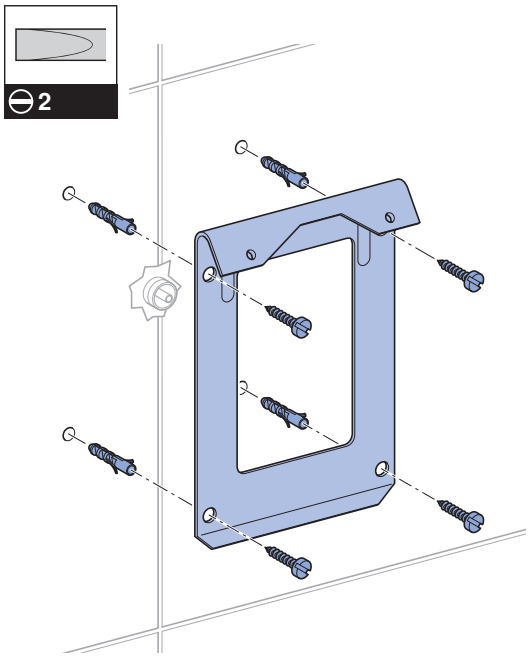

4

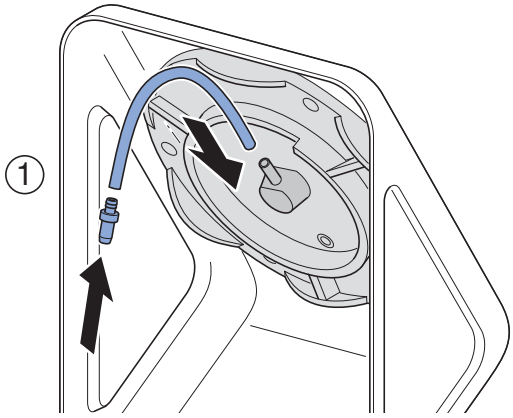

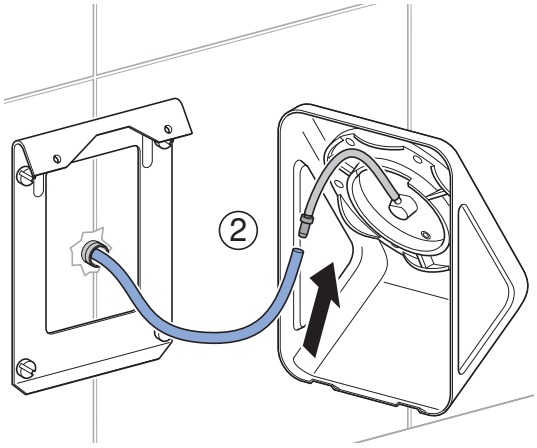

5

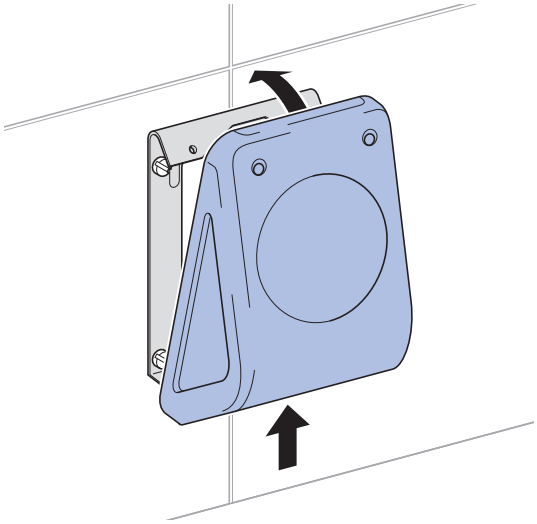

6

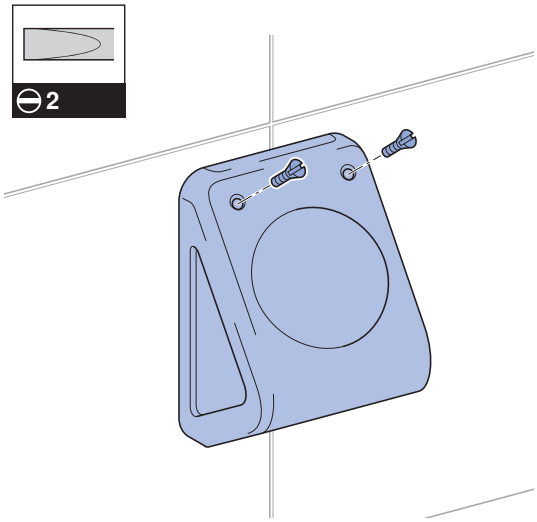

2

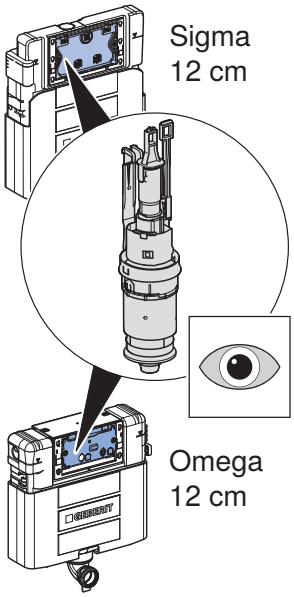

2 A 5

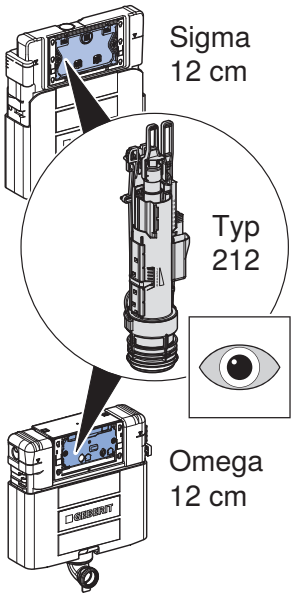

2 B 10

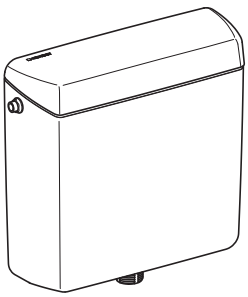

2 C 15

9007206486575115 © 06-2023
969.725.00.0(01)

2 A

✓

Sigma 12 cm Omega 12 cm

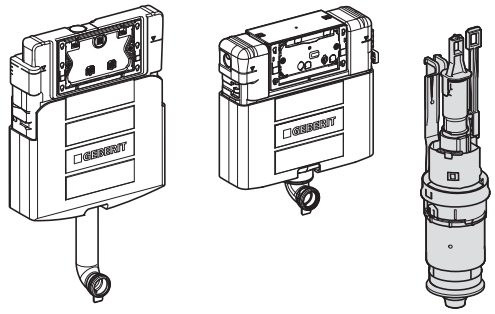

1

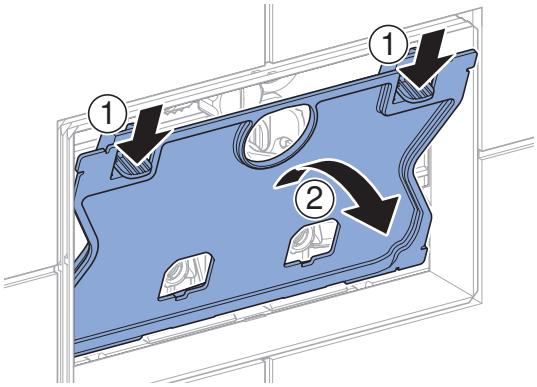

2

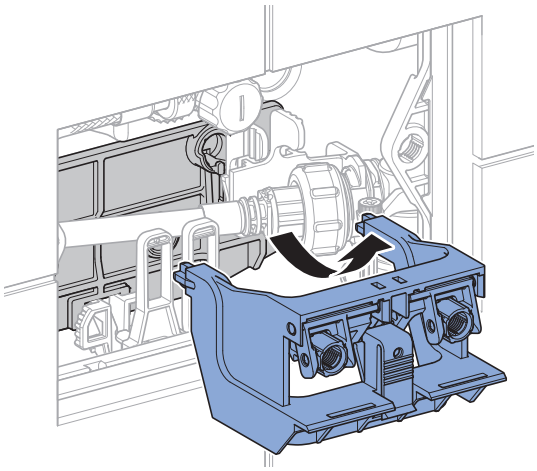

3

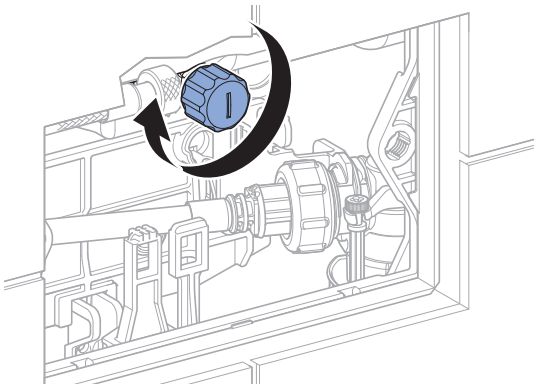

4

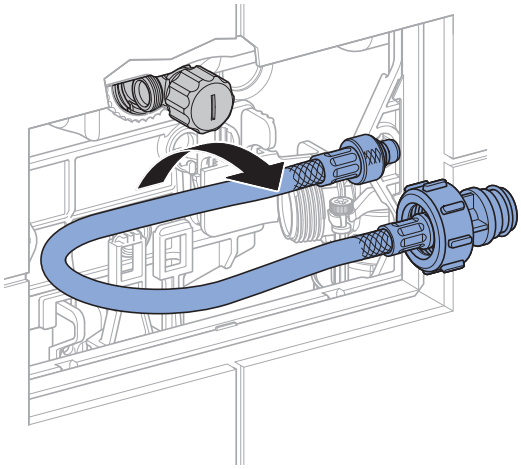

5

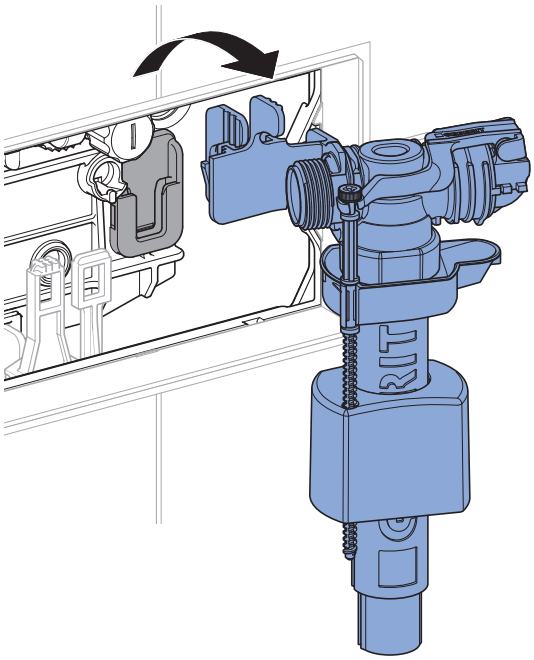

6

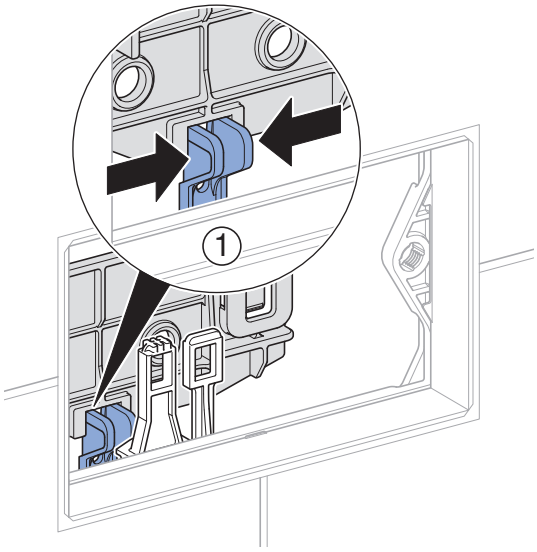

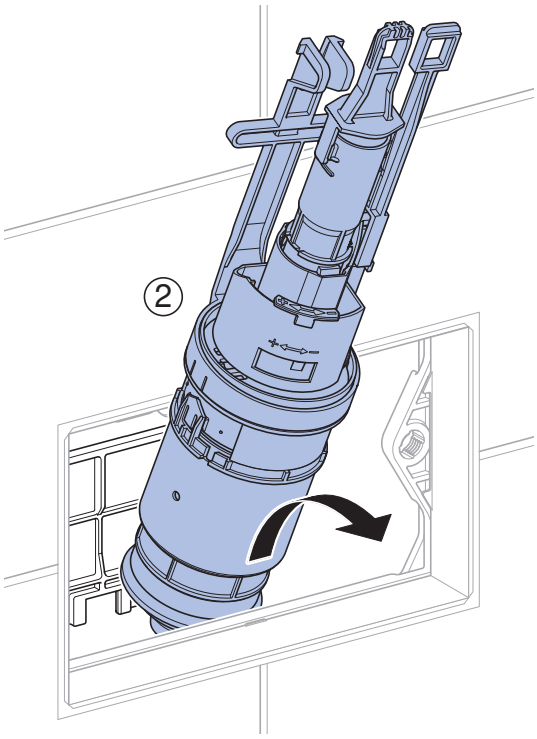

7

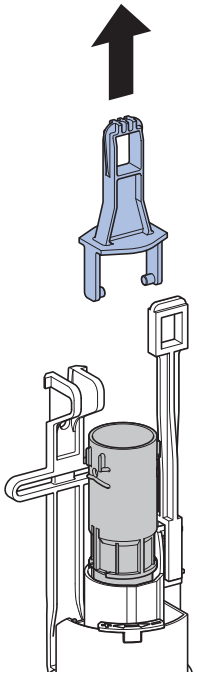

8

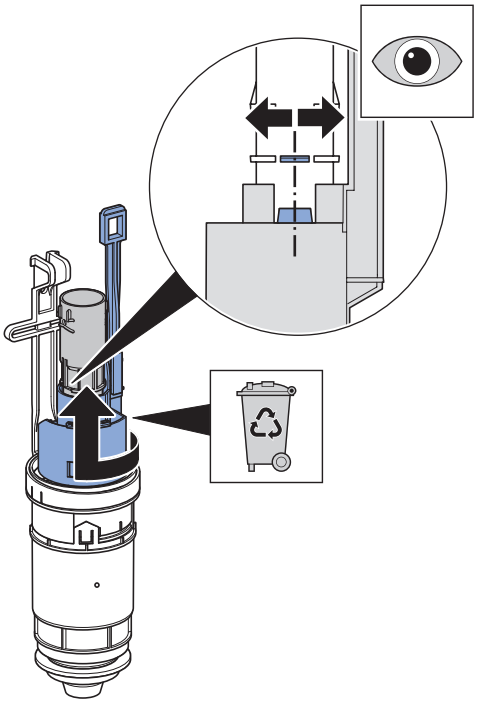

9007206486575115 © 06-2023
969.725.00.0(01)

9

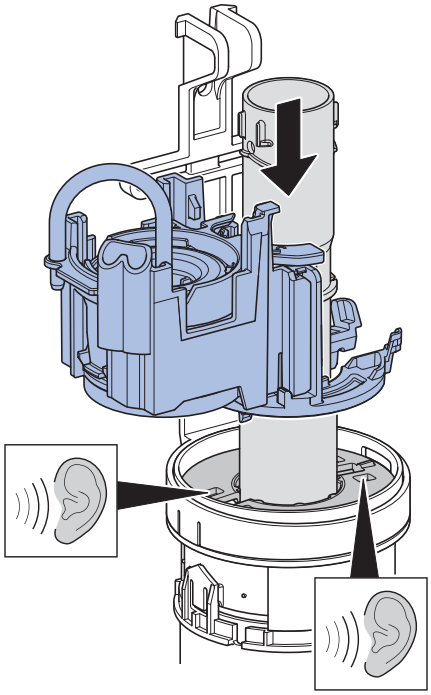

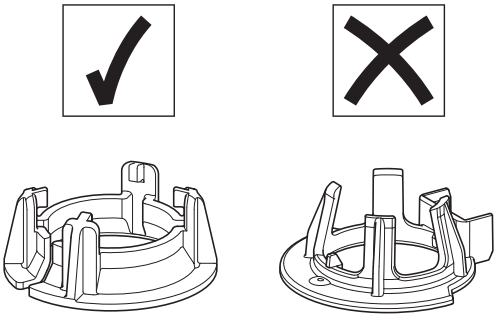

10

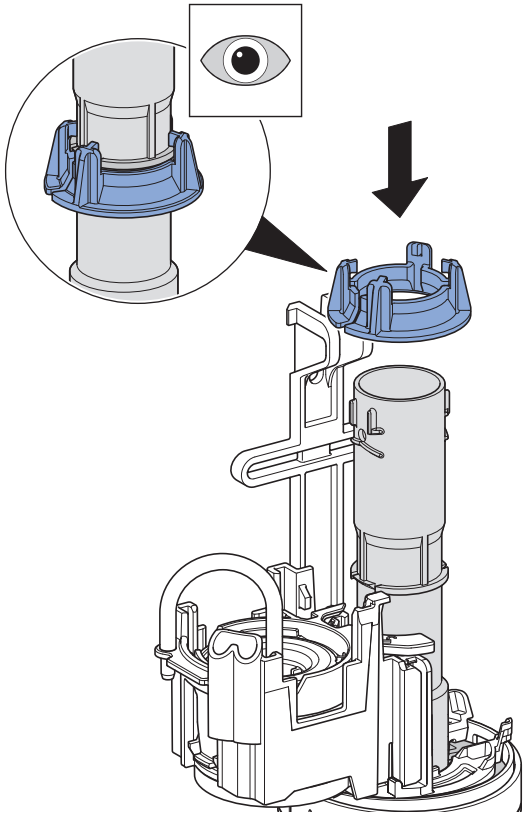

11

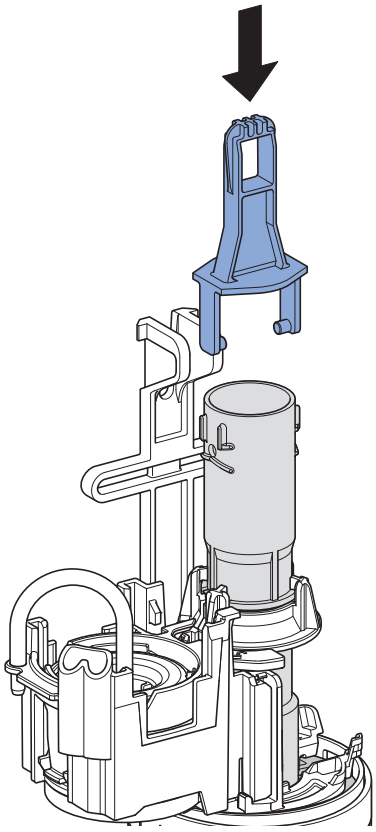

12

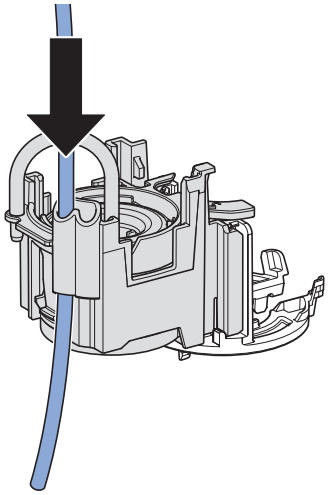

13

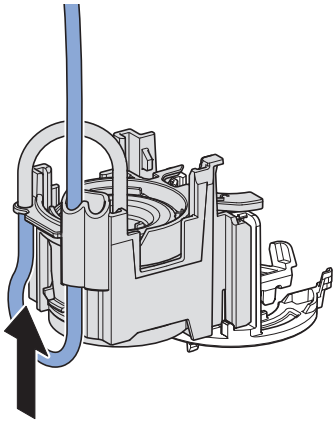

14

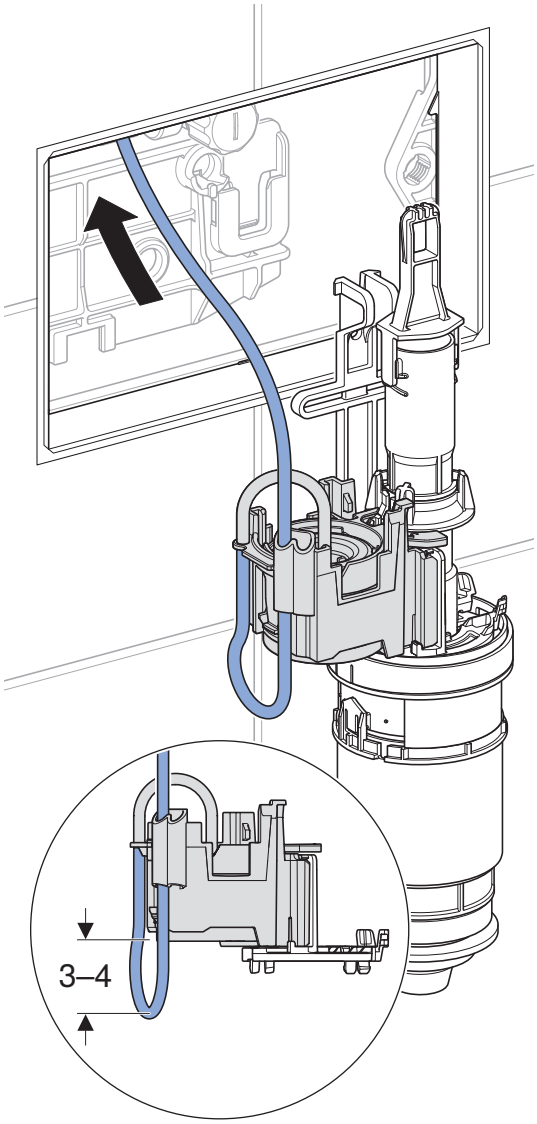

15

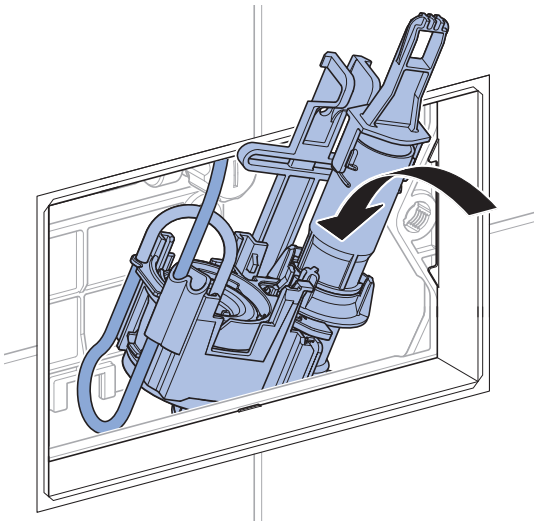

9007206486575115 © 06-2023

16

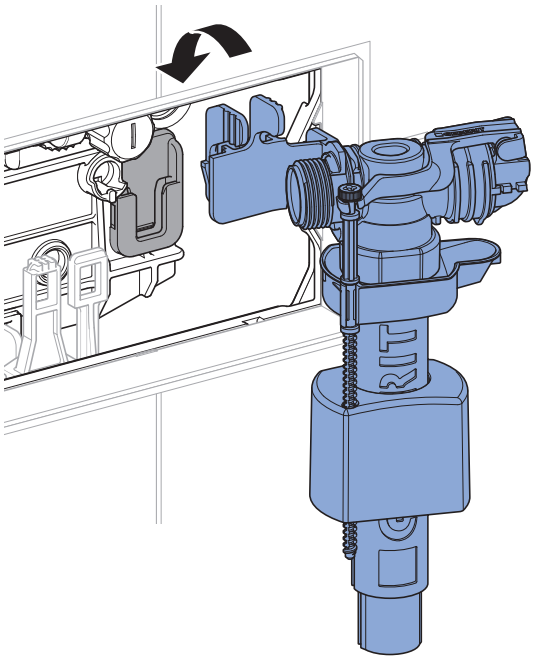

17

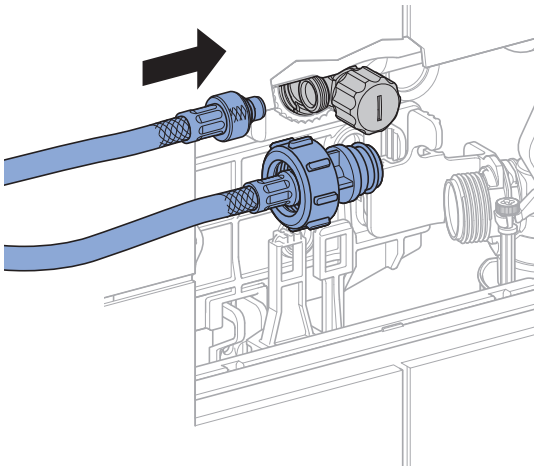

18

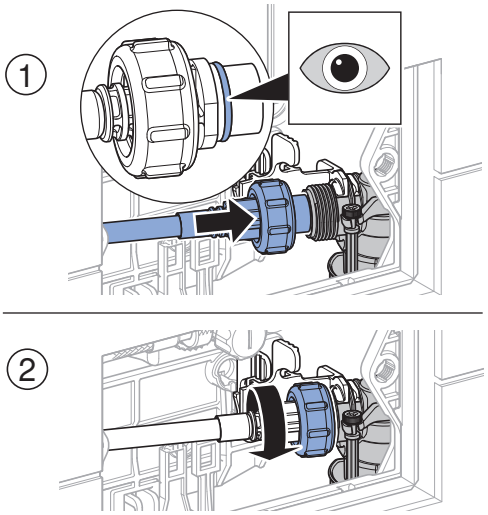

19

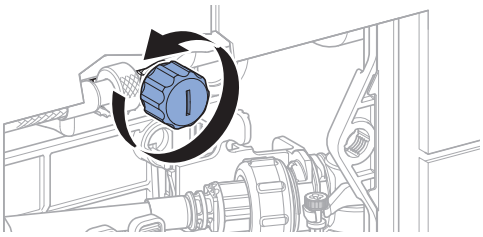

20

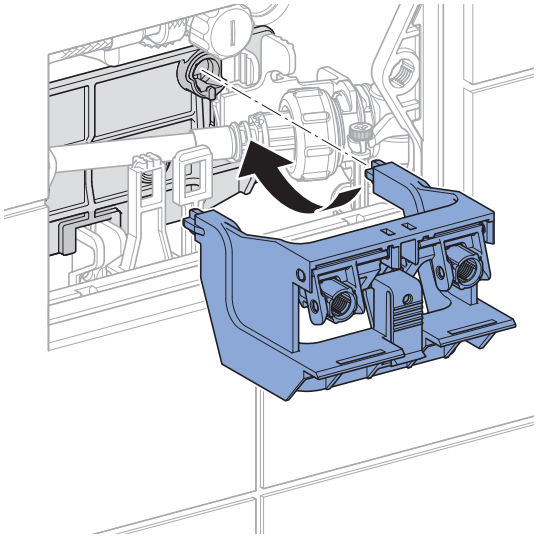

21

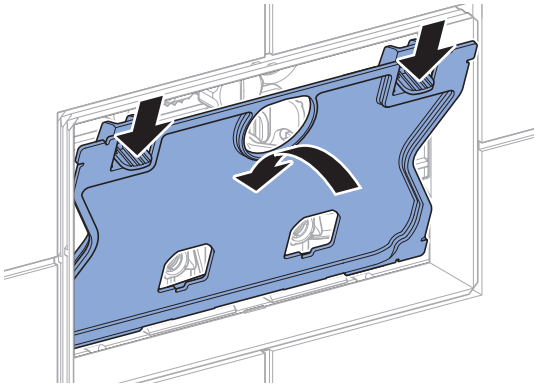

2 B

✓

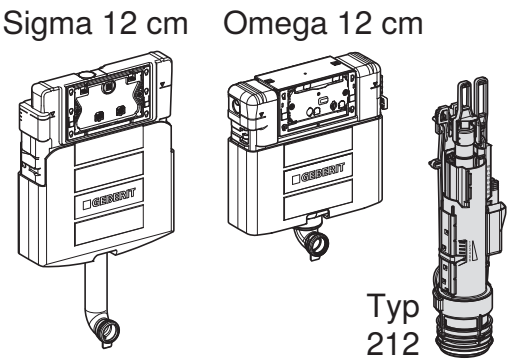

1

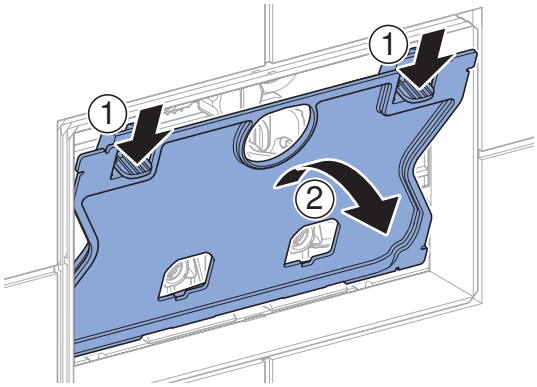

2

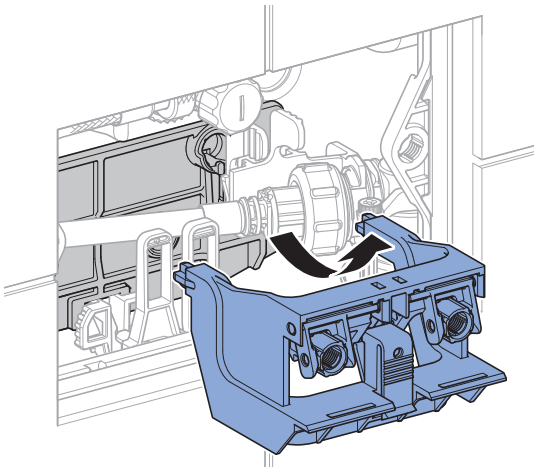

3

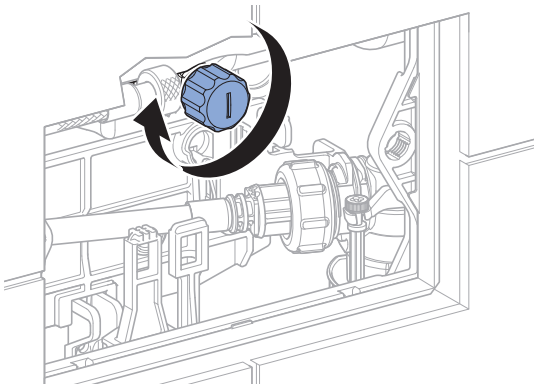

4

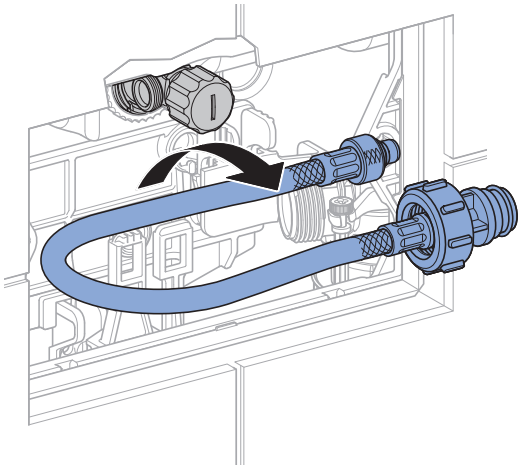

5

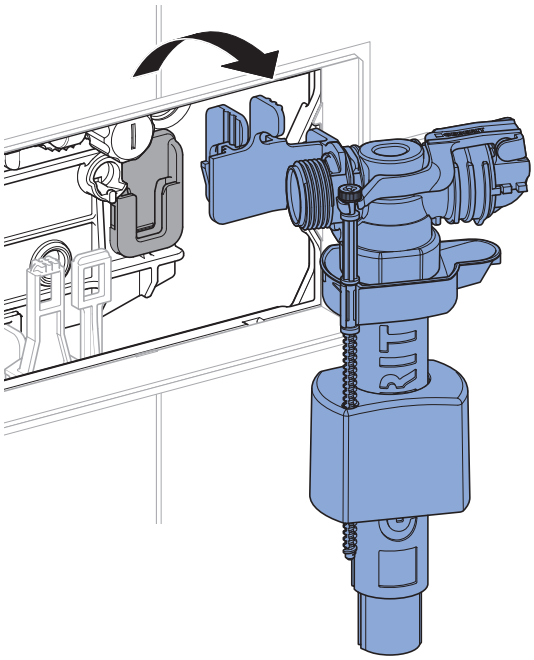

9007206486575115 © 06-2023
969.725.00.0(01)

6

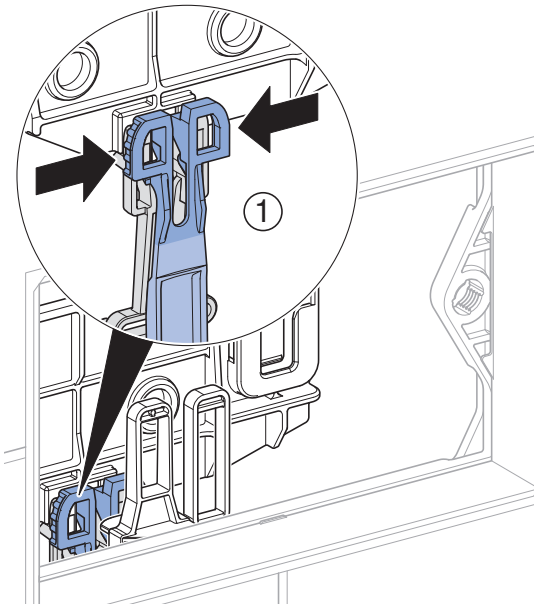
1

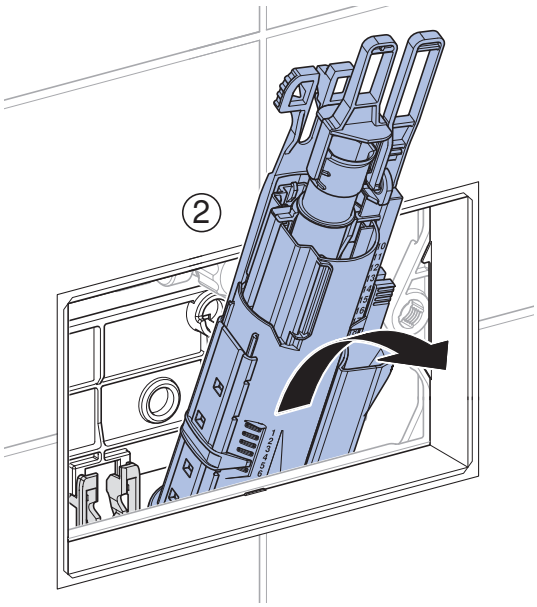
2

7

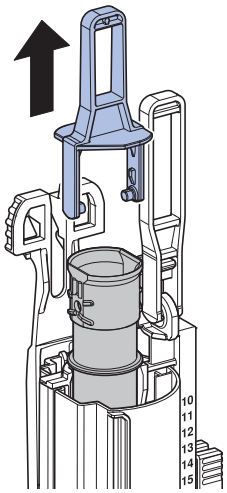
10
11
12
13
14
15

8

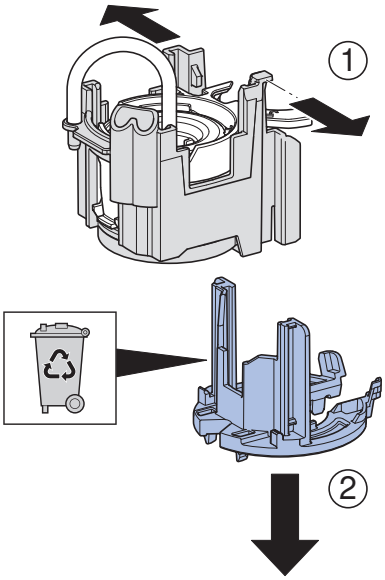
1
2

9

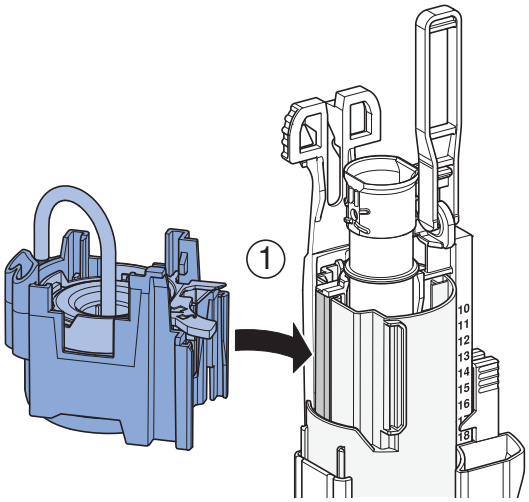
1
10
11
12
13
14
15
16
17
18

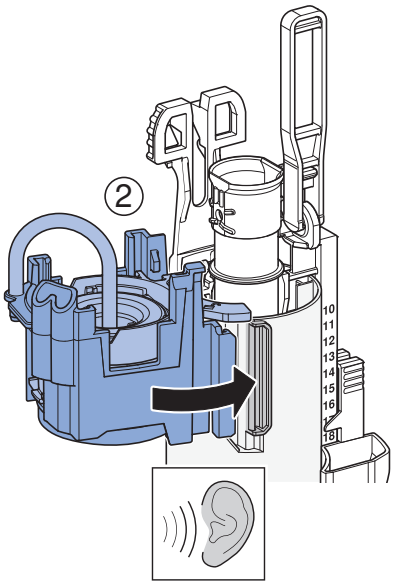
2
10
11
12
13
14
15
16
17
18

10

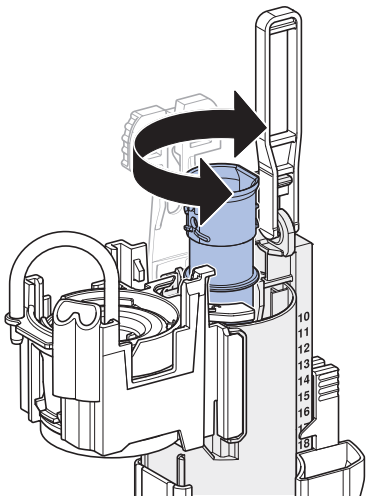

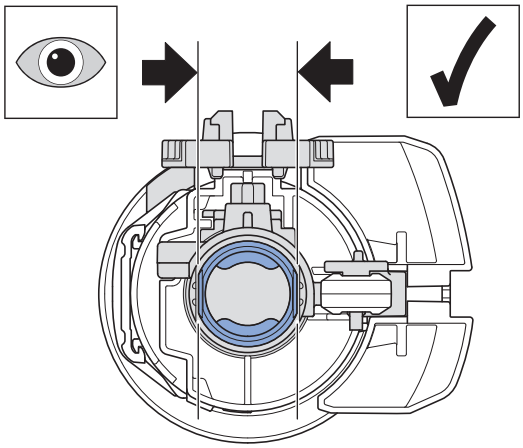

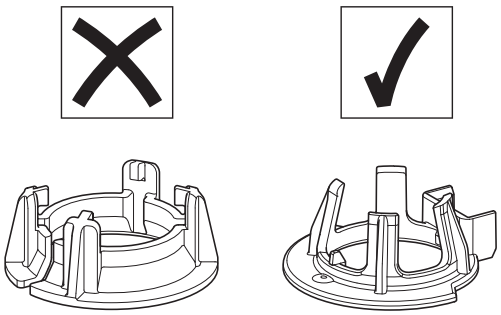

11

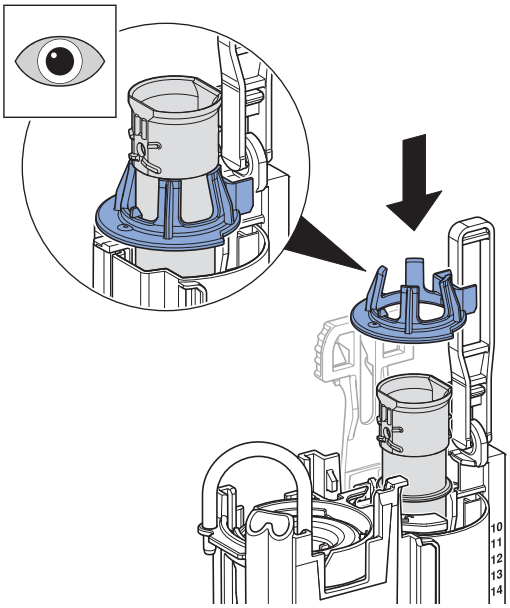

12

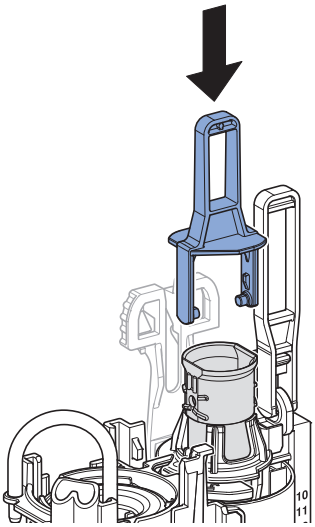

13

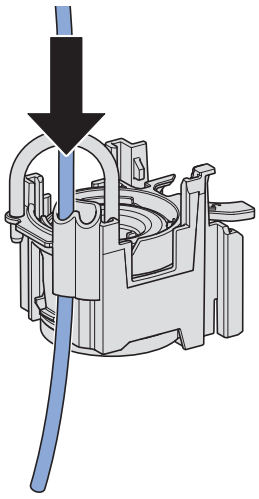

9007206486575115 © 06-2023
969.725.00.0(01)

14

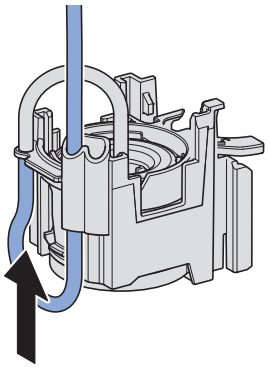

15

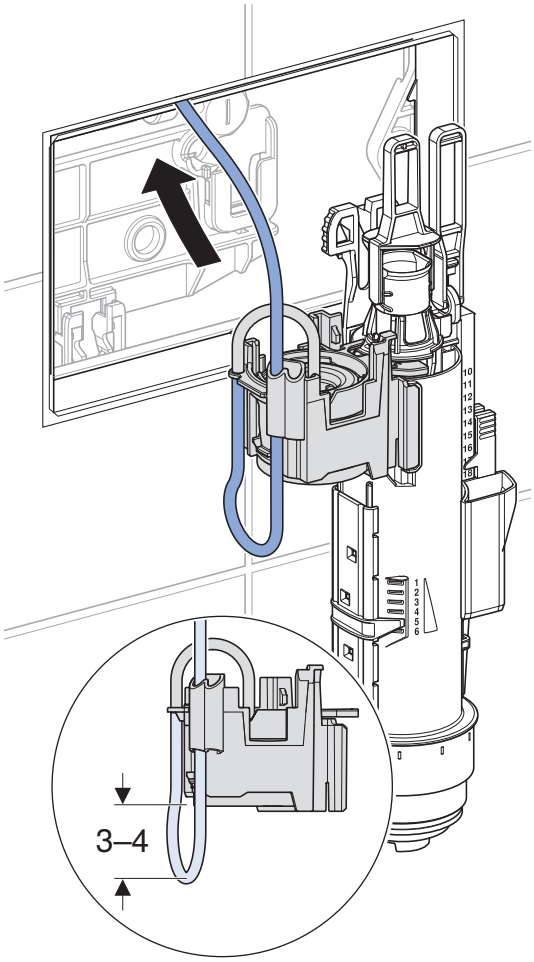

16

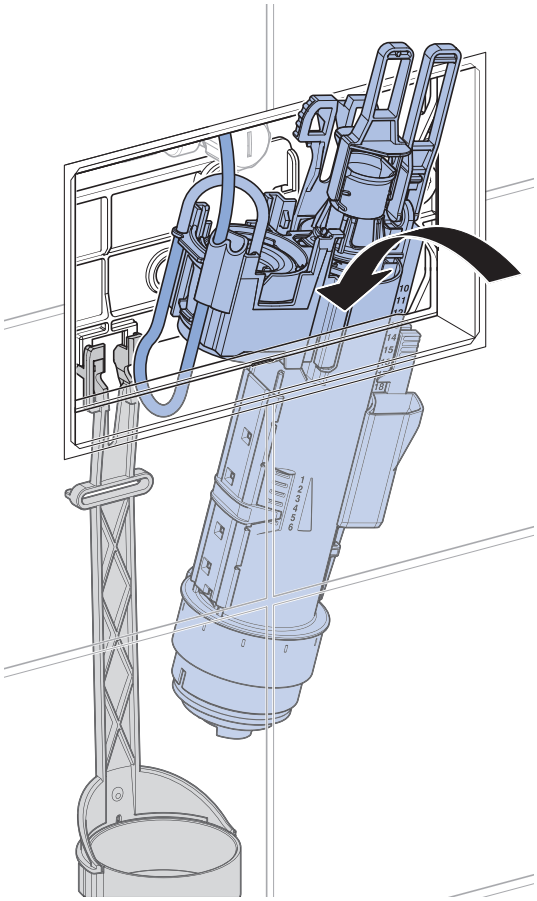

17

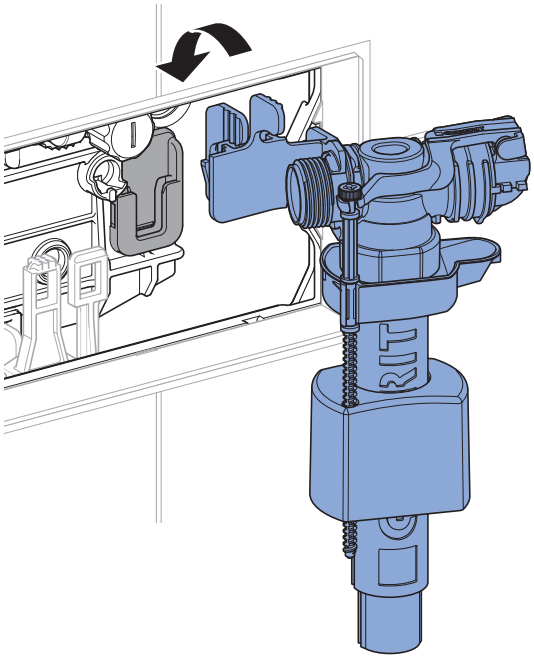

18

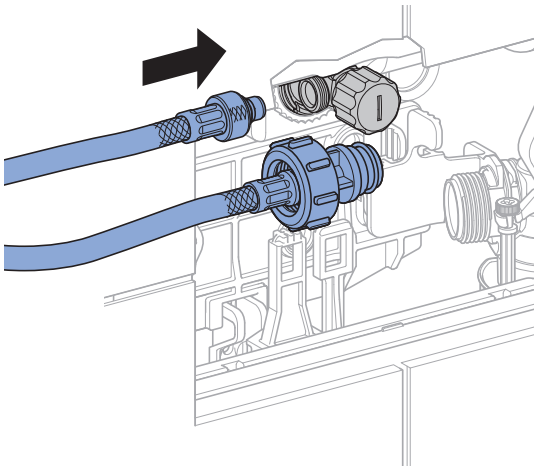

19

1

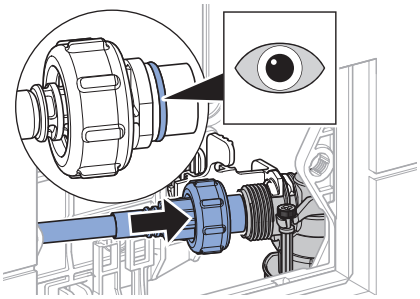

2

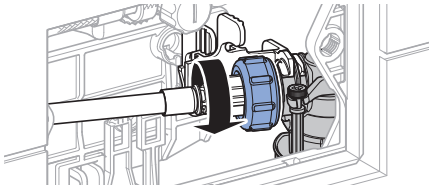

20

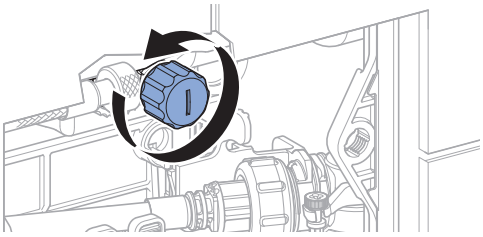

21

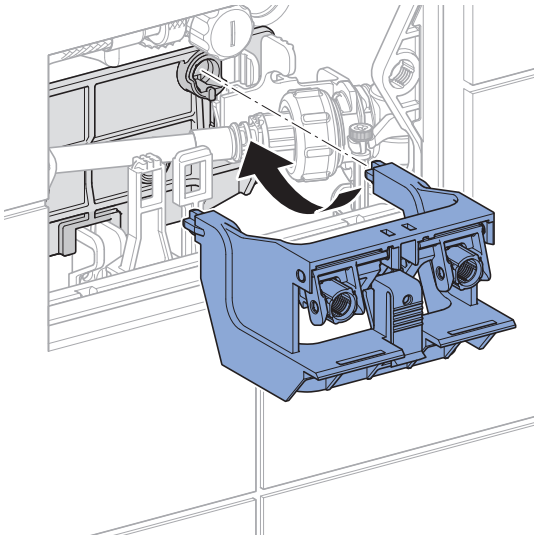

22

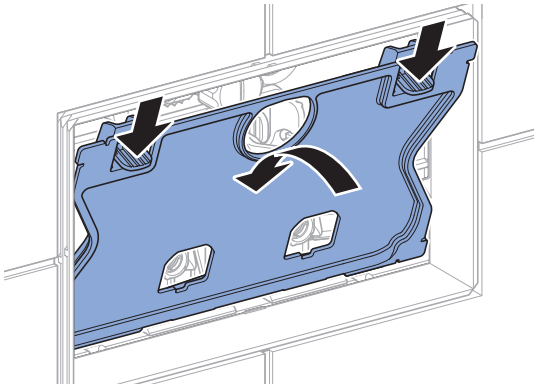

9007206486575115 © 06-2023
969.725.00.0(01)

2 C

✓

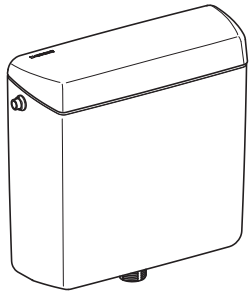

1

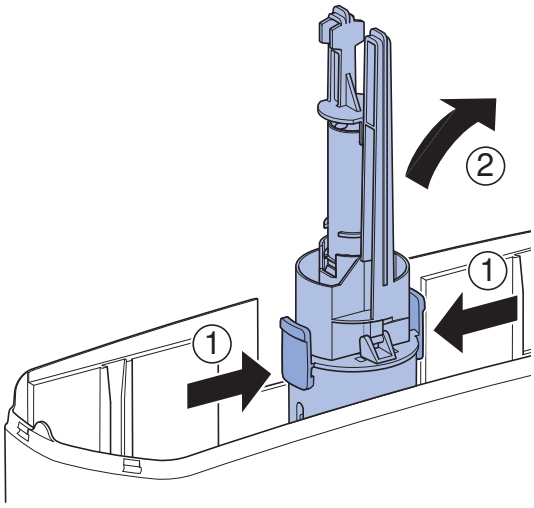

2

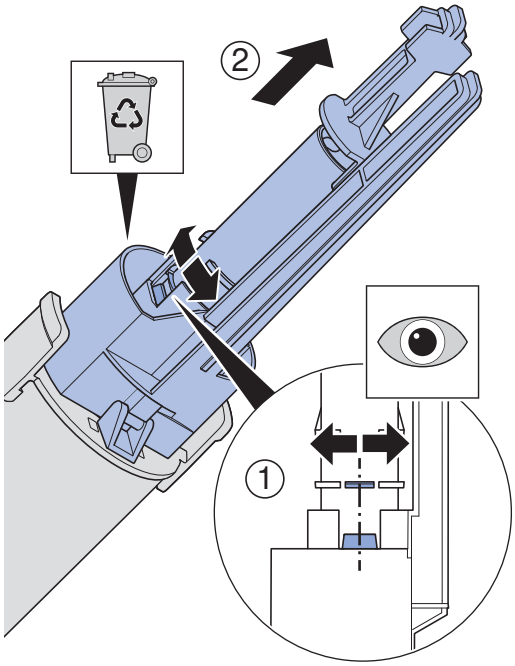

3

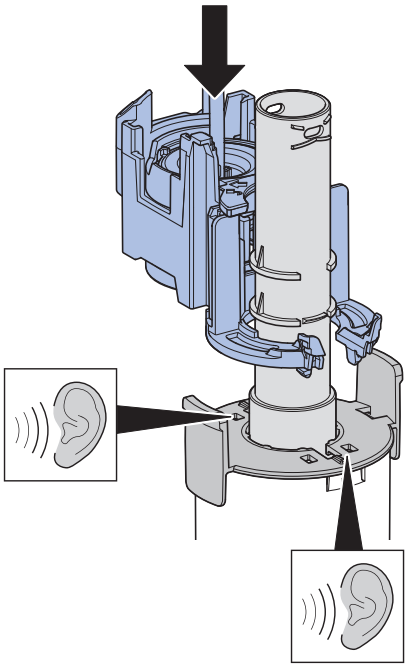

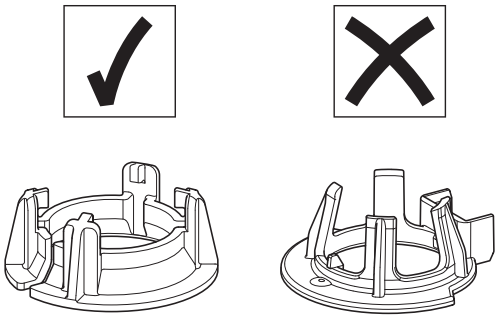

4

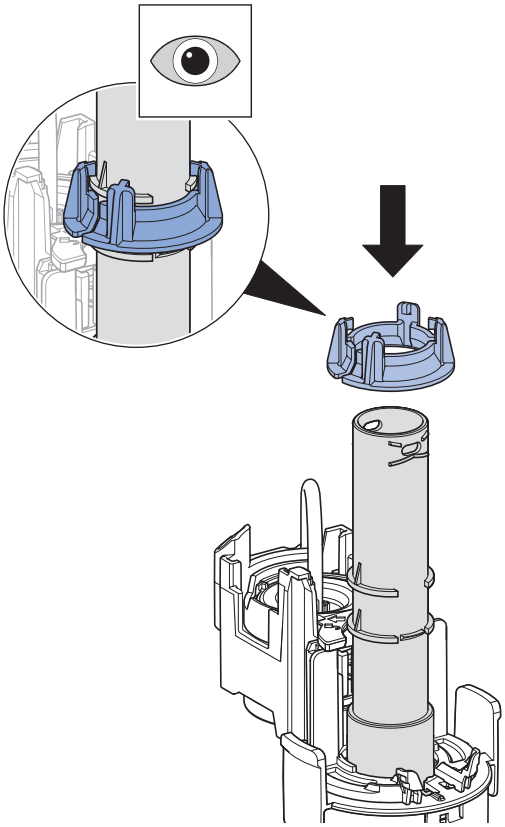

5

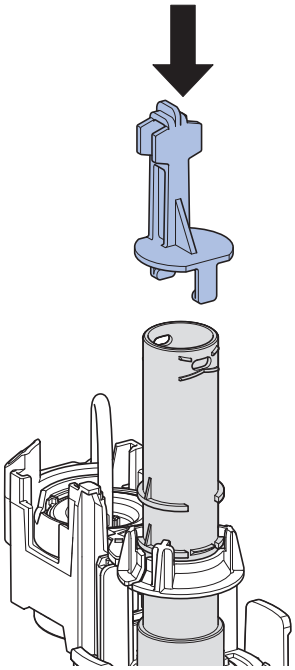

6

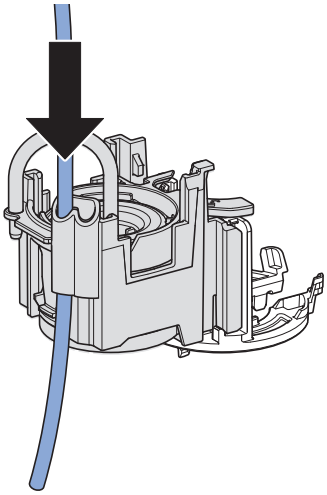

7

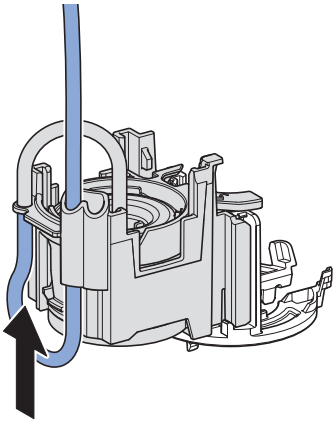

9007206486575115 © 06-2023
969.725.00.0(01)

8

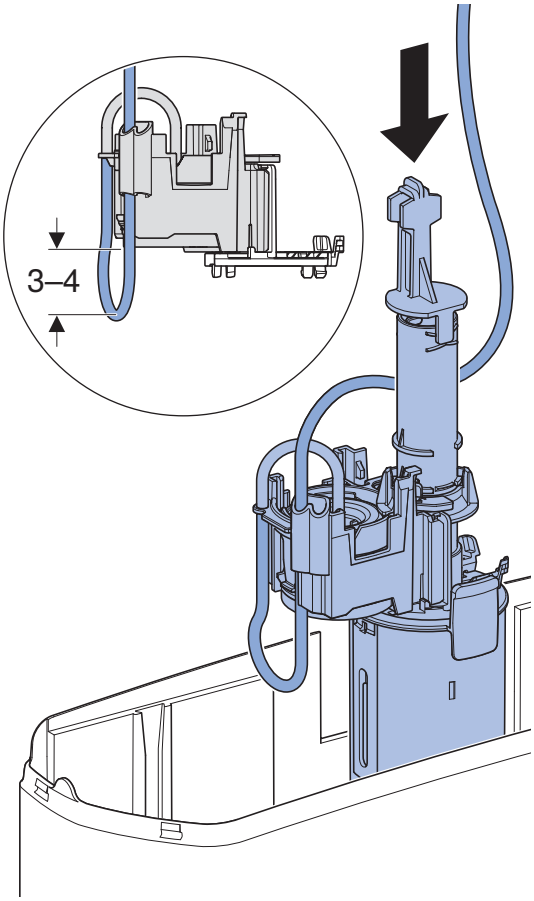

▶

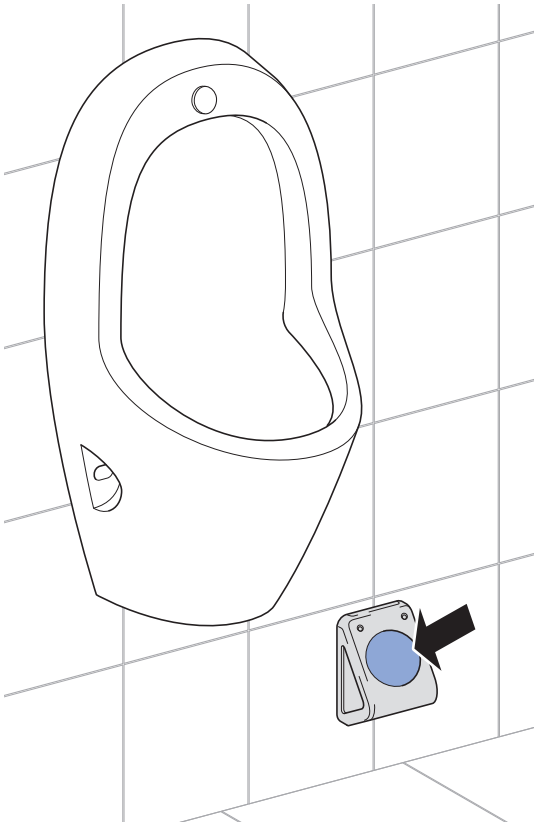

9007206486575115 © 06-2023

Geberit International AG
Schachenstrasse 77, CH-8645 Jona
documentation@geberit.com
www.geberit.com

9007206486575115 © 06-2023
969.725.00.0(01)