Technical data sheet

Spacer clip 732

Item no. 1362420

Spacer clip for the installation of pipes and cables on walls, ceiling and floors. With self-locking upper part. . Surfaces G and FT from a clip size of 20 are suitable for the installation with a nail device or a bolt-firing tool.
Approved for the maintenance of electrical function according to DIN 4102 Part 12, function maintenance classes E30 to E90.

E30 E90

St	Steel
G	Electrogalvanised

Master data

Item no.	1362420
Type	ASG 732 20 G
Description 1	Distance saddle
Description 2	with threaded connection M6
Dimension	17-20mm
Material	Steel
Material symbol	St
Surface	Electrogalvanised
Surface to DIN	DIN EN 12329
Surface symbol	G
Smallest sales unit (VG)	25,00 Piece
Weight	1,90 kg/100 pc.

Technical data sheet

Spacer clip 732

Item no. 1362420

Technical data

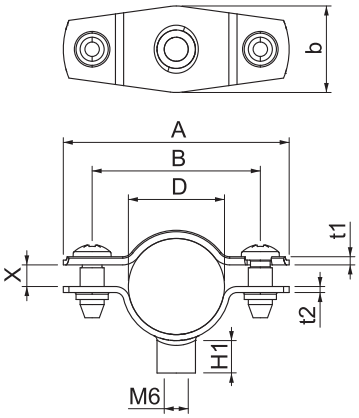

Dimension A	47,00 mm
Dimension B	35,00 mm
Dimension b	18,00 mm
Dimension D	17,00 - 20,00 mm
Dimension D	20,00 mm
Dimension H1	6,50 mm
Dimension t1	1,00 mm
Dimension t2	1,25 mm
Dimension x	4,50 mm
Distance to the wall	☑
Number of cables/pipes	1,00
Version	Closed
Fastening type	Threaded connection
Suitable in fire protection area	☑
Halogen-free	☑
Plastic coated	☐
Clamping range D	17,00 - 20,00 mm
UV-resistant	☑