Technical data sheet

Pipe end cap, splittable, metric, black

Item no. 2047944

Separable pipe end cap to slot onto metric electrical installation pipes.
The separable pipe end cap can be used for repairs on existing installations according to regulations. It is not necessary to disconnect the cables, allowing quick mounting.

PE Polyethylene

Master data

Item no.	2047944
Type	129 TB M20 SW
Description 1	Pipe end sleeve, separable
Description 2	metric
Dimension	M20
Colour	Black
Material	Polyethylene
Material symbol	PE
Smallest sales unit (VG)	50,00 Piece
Weight	0,44 kg/100 pc.

Technical data sheet

Pipe end cap, splittable, metric, black

Item no. 2047944

Technical data

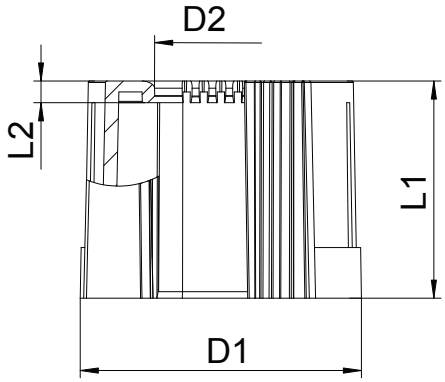

Dimension D1	24,00 mm
Dimension D2	13,40 mm
Dimension L1	30,00 mm
Dimension L2	3,00 mm
Version	Connector
For pipe diameter	20,00 mm
Size	M20
Halogen-free	☑
Brushed surface	☐
Polished surface	☐