Technical data sheet

Cable tray RKS-Magic® 60

Item no. 6047654

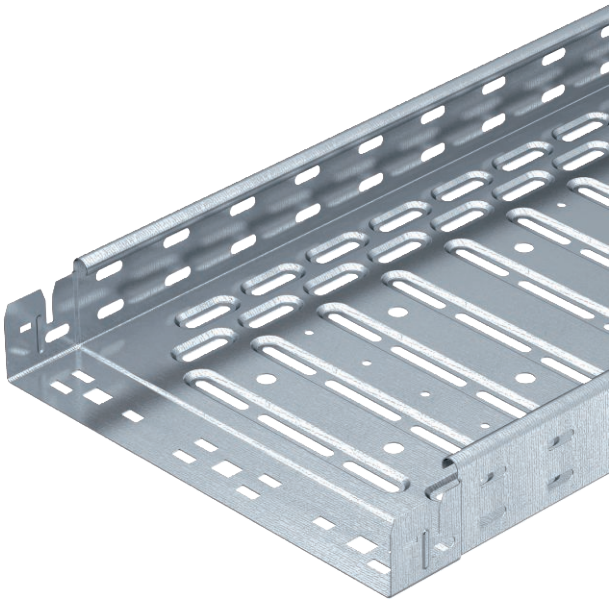

Cable tray with integrated quick fastening system. The usable length of the cable tray is 3,000 mm.
The cable tray has continuous side perforations of 7 x 20 mm for the installation of additional connection and mounting components.
The perforation for direct threaded rod suspension has a diameter of 11 mm.

E30 E90 E60

St	Steel
FS	Strip galvanised

Additional product text, instruction	Continuous equipotential bonding is guaranteed without additional components.
Additional product text 1	Magnetic shield insulation without cover 20 dB, with cover 50 dB.
Product text, standards	The cable tray is tested for the maintenance of electrical function, tested according to DIN 4102 Part 12 and for mounting above suspended fire protection ceilings (each for tray widths 100 - 400 mm). The mounting version and parameters correspond to the valid certificates. You can find additional information in our fire protection systems catalogue.

Master data

Item no.	6047654
Type	RKSM 630 FS
Description 1	Cable tray RKSM
Description 2	Magic, quick connector
Manufacturer	OBO
Dimension	60x300x3050
Material	Steel
Material symbol	St
Surface	Strip galvanised
Surface to DIN	DIN EN 10346
Surface symbol	FS
Smallest sales unit (VG)	3,00 m
Weight	233,80 kg/100 m

Technical data sheet

Cable tray RKS-Magic® 60

Item no. 6047654

Technical data

Usable cross-section	17.800,00 mm²
Usable cross-section	178,00 cm²
Suitable for maintaining electrical function	☑
Connector version	Integrated connector
Base perforation	1
With cover	☐
Mounting perforation in base	☑
NATO hole pattern	☐
Rustproof steel, pickled	☐
Side perforation	☑
Wide-span version	☐

Dimensions

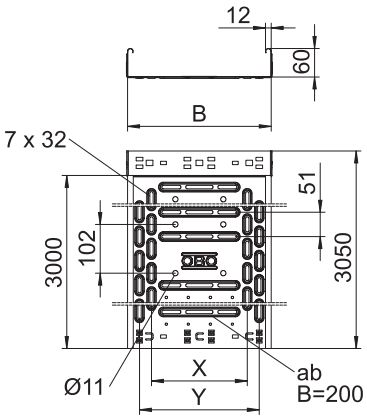

Length	3.050,00 mm
Width	300,00 mm
Height	60,00 mm
Side height	60,00 mm
Dimension B	300,00 mm
Dimension x	200,00 mm
Dimension y	250,00 mm
Dimension t	100,00 mm
Plate thickness	0,75 mm

Appr. load:

NEMA load class	8AA
Support spacing 1.0 m	1,20 kN/m
Support spacing 1.5 m	1,00 kN/m
Support spacing 2.0 m	0,55 kN/m
Support spacing 2.5 m	0,40 kN/m

Appr. load:

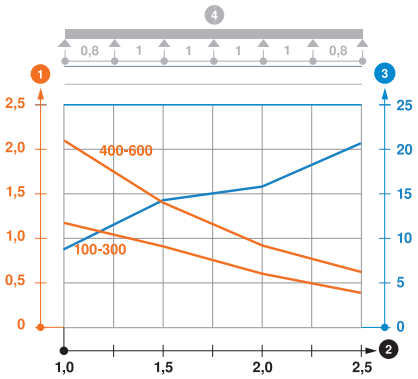

Load diagram, cable tray, type RKSM 60

1. Permitted cable tray/ladder load in kN/m without man load
2. Support width in m
3. Rail bend in mm at permitted kN/m
4. Load scheme during testing

— Load curve with cable tray/ladder width in mm

— Strut bend curve according to support width